Fairo 125 ECO-Line Left

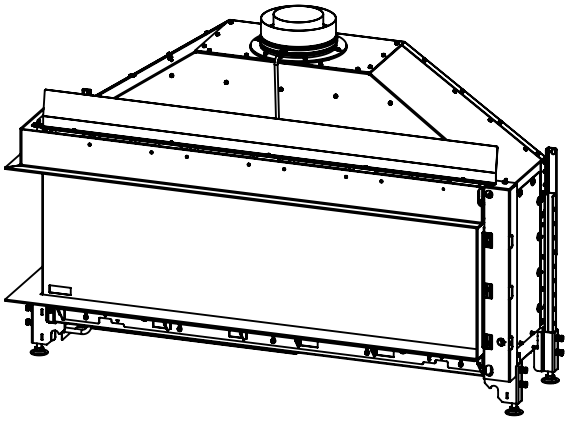

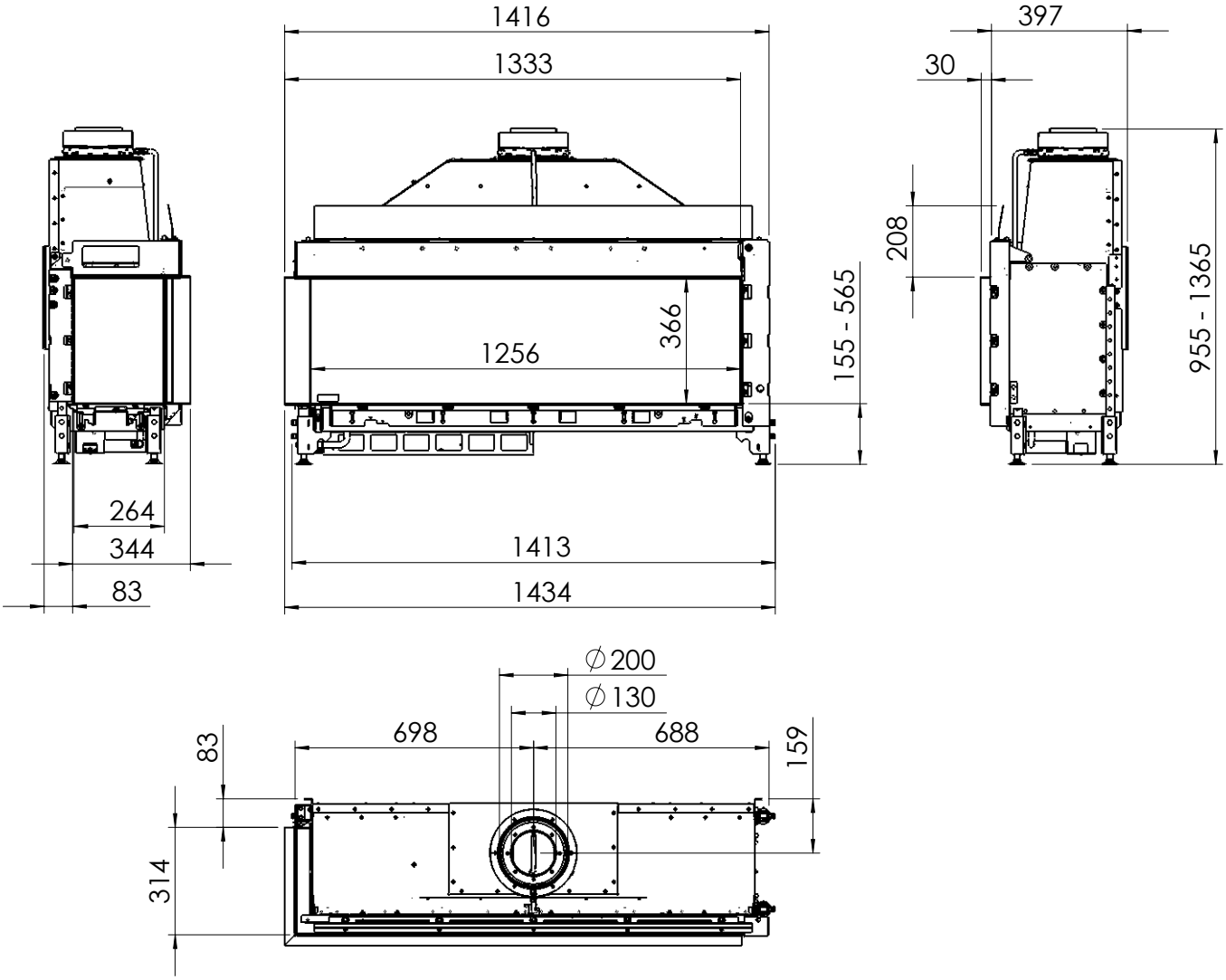

All dimensions in mm. Modifications under reserve.

19-11-2014 sheet 1 / 3

© All rights reserved. This drawing is sole property of Kal-fire. No part of this drawing may be reproduced, or published, in any form or in any way without prior written permission from Kal-fire.

Fairo 125 ECO-Line Left

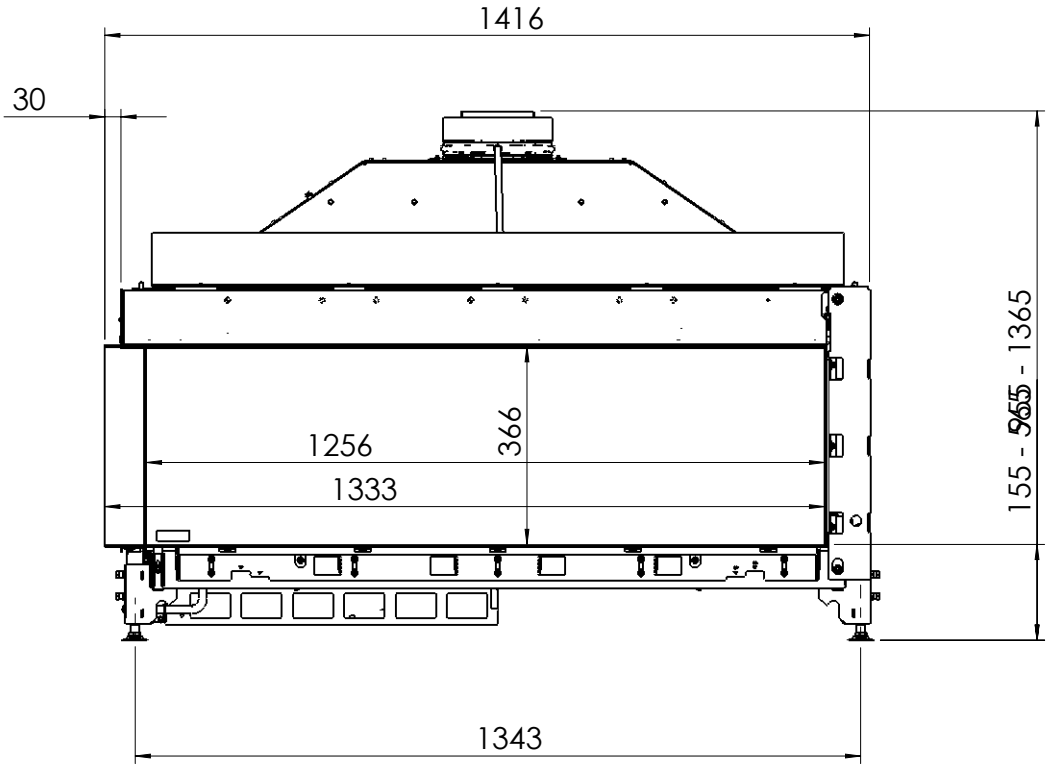

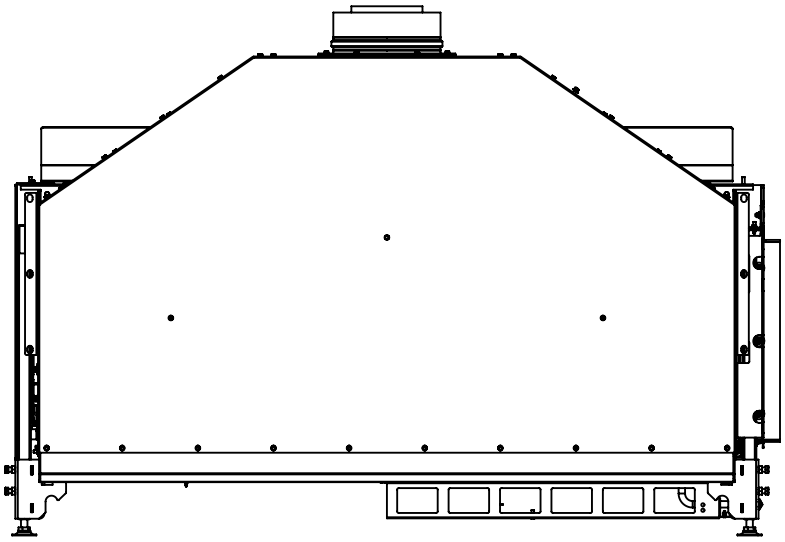

All dimensions in mm. Modifications under reserve. 19-11-2014 sheet 2 / 3

© All rights reserved. This drawing is sole property of Kal-fire. No part of this drawing may be reproduced, or published, in any form or in any way without prior written permission from Kal-fire.

Fairo 125 ECO-Line Left

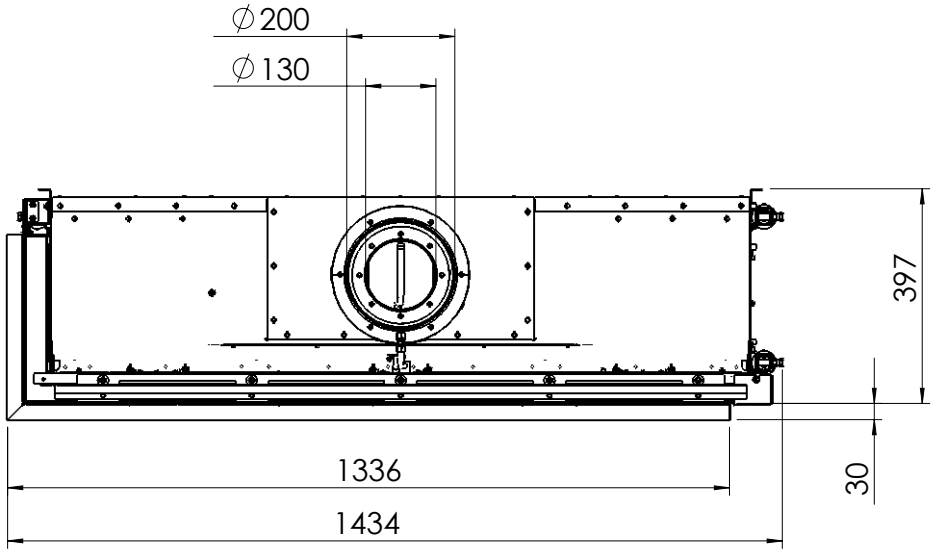

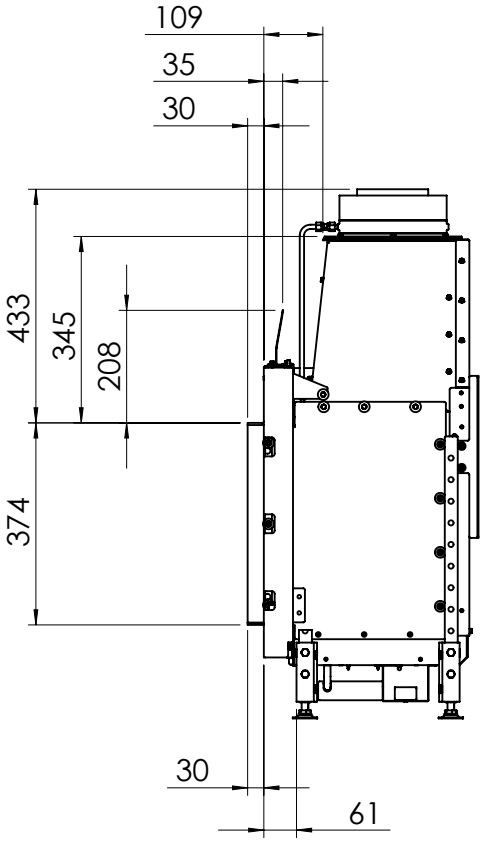

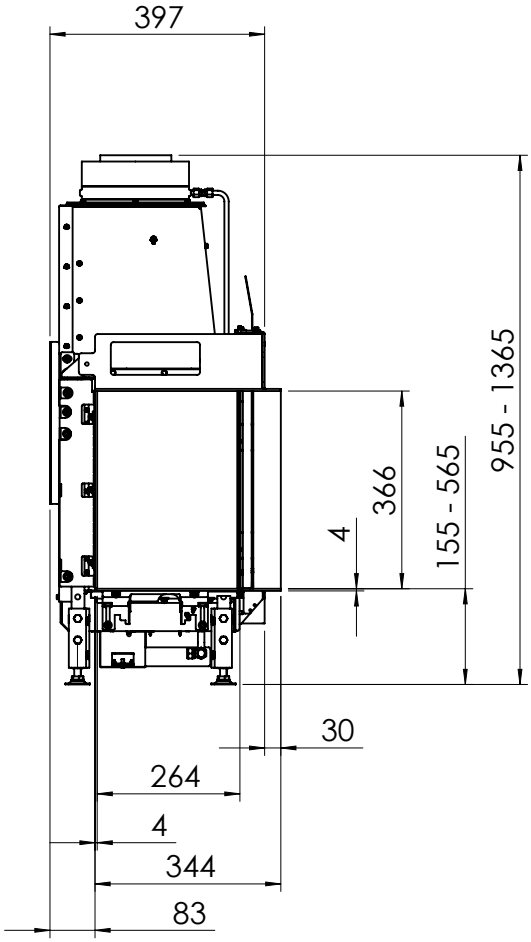

All dimensions in mm. Modifications under reserve.

19-11-2014 sheet 3 / 3

© All rights reserved. This drawing is sole property of Kal-fire. No part of this drawing may be reproduced, or published, in any form or in any way without prior written permission from Kal-fire.